HIGH TORQUE HYBRID STEPPING MOTOR SPECIFICATIONS

General specifications		Electrical specifications	
Step Angle (°)	0.9	Rated Voltage (V)	2.8
Temperature Rise (℃)	80 Max (rated current、2 phase on)	Rated Current (A)	2
Ambient Temperature (℃)	-20~+50	Resistance Per Phase (±10% Ω)	1.4
Number of Phase	2	Inductance Per Phase (±20% mH)	2.2
Insulation Resistance (MΩ)	100 Min (500VDC)	Holding Torque (N.cm)	39
Insulation Class	Class B		
Max.radial force (N)	75 (20mm from the flange)		
Max.axial force (N)	15		

● Wiring Diagram :

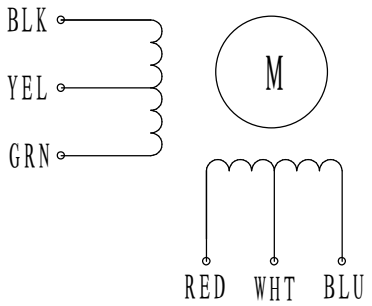

● Dimensions:
(unit=mm)

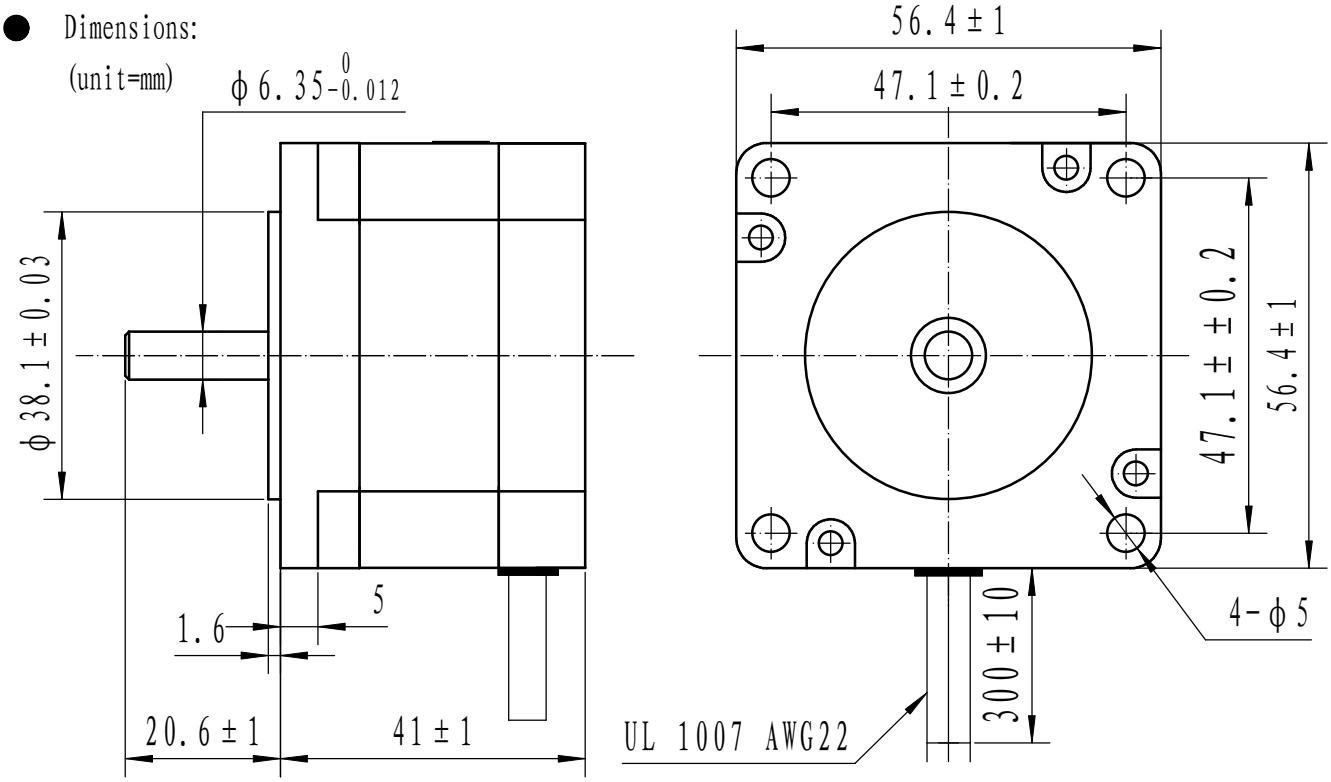

					SY57STH41-2006MA	TECHNICAL CONDITIONS
REV	REVISIONS	DESCRIPTION	BY	DATE		
DRAW	2019.5.6				CHANGZHOU SONGYANG MACHINERY & ELECTRONICS NEW TECHNIC INSTITUTE	070041001
CHECK						
APPROVE						