KLS electronic
www.cnkls.com

I

Side level sensor

KLS26-MR-L1 Side level sensor

Material:

Float ball:PP Blue
Float body:PP White
Cap nut:PP White
O-ring:Rubber
E-ring:PP White
Wire:UL 1007 24# black
Filling:epoxy glue
Reed switch:229

Electrical Specification:

Contact rating:50W
Max switching current:DC350/AC300
Breakdown voltage:600 min
Max switching voltage:DC0.7/AC0.5
Max carry current:2.5A
Contact resistance:100 max
Insulation resistance:10^{10} min
Get an electric shock life:10^{7}
Applicable temperature:-10°C~+85°C

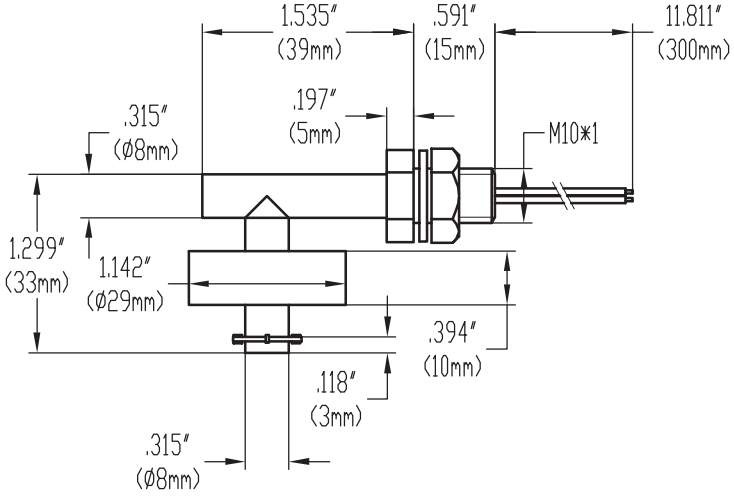

Movement explanation

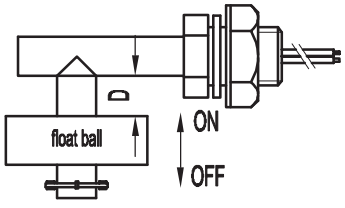

Movement explanation:
When the float drops to the D position in the position between D=3±1mm,the reed switches will be closed

ORDER INFORMATION

Product NO.: KLS26-MR-L1

Pos. NO. — Serial number