D1RFRD006

REVISION RECORD				
REV	ECO	DESCRIPTION	DRFT	DATE
1		Drawing revise	Haoyh	04/27/06
2		修改螺丝料号	CSX	08/22/06

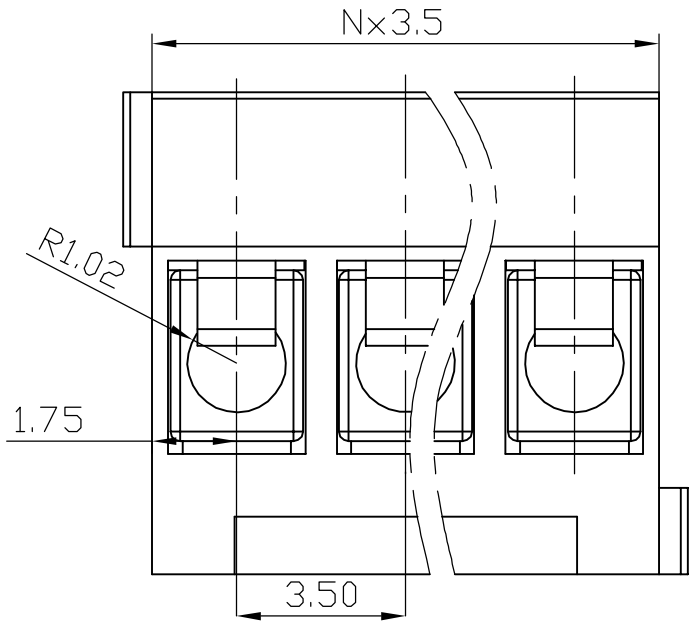

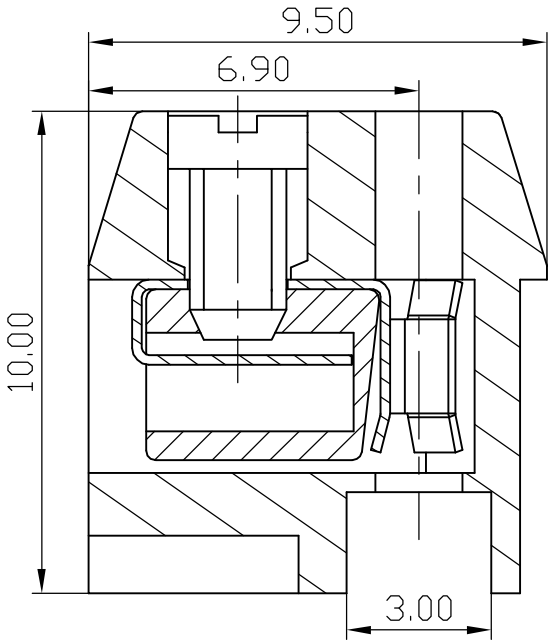

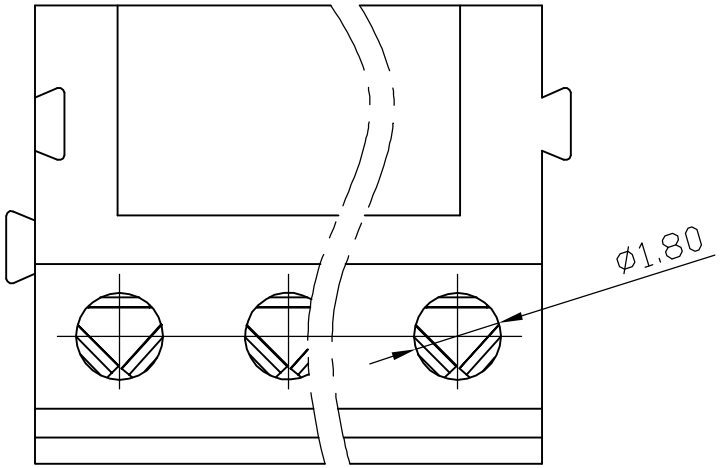

Notes:

1. Pitch:3.5mm
2. Rated current:10A
3. Rated voltage:300V
4. Operation temperatures:-30℃～+120℃
5. Withstanding Voltage:AC2000V/1Min
6. Insulation Resistance:5000MΩ/DC1000V
7. Wire Range:28～16AWG,1.5mm²
8. Max.Torque Value:M2,2.04kgf.cm
9. Undimensioned Tolerances:

Pitch range in mm			Normal dimension range in mm					
to 6	over 6 to 10	over 10 to 24	to 6	over 6 to 30	over 30 to 90	over 90 to 200	over 200 to 480	
±0.10	±0.15	±0.25	±0.1	±0.2	±0.3	±0.5	±0.7	005/10

ITEM	NAME OF PART	NO. OF PART	Q"TY	MATERIAL	NOTES
	DG333K-3.5-housing	4054A0YXXA(H)	1	PBT	UL94V-0
4	DG333K Brass cage	X000000680(H)	XX	Brass	Ni plated
3	DG333K Wire guard	X000000690(H)	XX	Phosphor bronze	Ni plated
2	DG333K Screws	S000001960(H)	XX	Steel	$Cr^{3+}Zn$

DETACHED LISTS

MM (INCH)

TOLERANCES EXCEPT AS NOTED

MM
.0 ±
.00 ±
.000 ±

ANGLES ± 1°

THIRD ANGLE PROJECTION

DFTD LIUM DATE 10/04/05"
CHKD DATE
MFD DATE
APPVL DATE

MATERIAL :
G.E :
FINISH:
SCALE :

DEGSON®
宁波高正电子有限公司
DEGSON ELECTRONICS CO., LTD

NAME
DG333K-3.5-XXP-1Y-00A(H)

DRAWING NO. DG333K-E02
/PART NO.
SIZE A3
REV T2 08/22/06

DO NOT SCALE DRAWING
SHEET 1 OF 1