D1RFRD006

REVISION RECORD				
REV	ECO	DESCRIPTION	DRFT	DATE
1		修改刻字及整理图面	Yej	09/06/06"
2		修改刻字	LJH	12/01/08"
3		修改刻字	LJH	12/08/08"
4		增加CQC标志	Yej	02/10/09"
5		塑体老模新开结构及刻字变更	HXG	07/25/09"

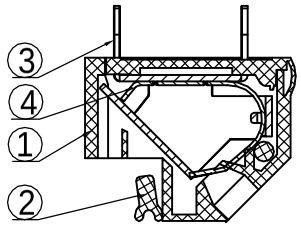

SECTION A-A

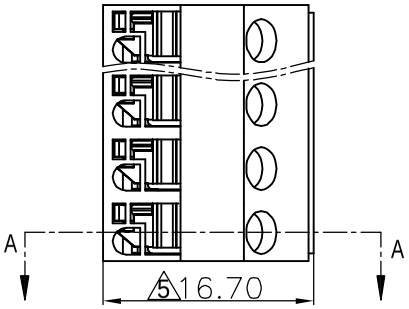

Notes:

1. Pitch:5.08mm ,Poles:2-7P
2. Rated voltage/current:UL 300V/10A
   VDE 320V/10A
3. Operation temperatures:-40℃～+105℃
4. Withstanding Voltage:AC2000V/1Min
5. Insulation Resistance:5000MΩ/DC1000V
6. Wire Range:22～16AWG,0.2-1.5mm²
7. Undimensioned Tolerances:

Pitch range in mm			Naminal dimension range in mm					—
to 6	over 6 to 10	over 10 to 24	to 30	over 30 to 60	over 60 to 100	over 100 to 150	over 150	⌒ ▱
±0.10	±0.15	±0.25	±0.2	±0.3	±0.5	±0.7	±1.0	0.05/10

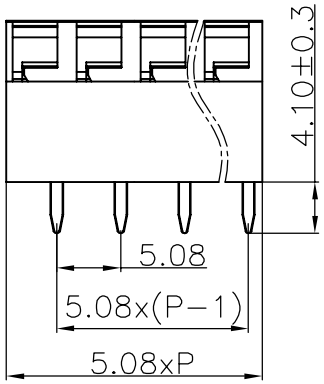

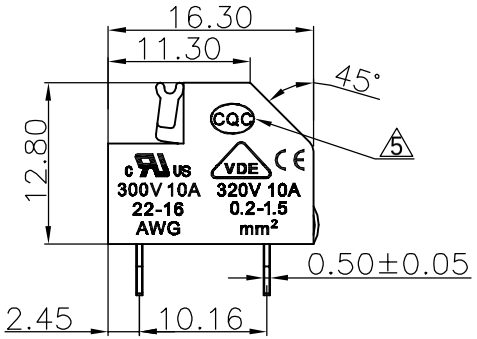

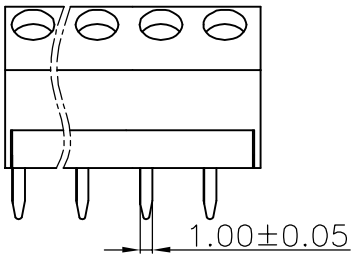

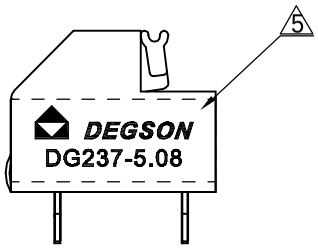

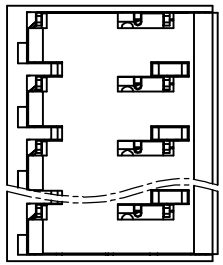

5

ITEM	NAME OF PART	NO. OF PART	Q"TY	MATERIAL	NOTES
4	DG237-5.08-Shrapnel	X000000890(H)	XX	Stainless steel	
3	DG237-5.08-Pin header	3010B00010(H)	XX	Brass	SnCe
2	DG237-5.08-Batton	3010D0501A(H)	XX	PA66	UL94V-0
1	DG237-5.08-Housing	3010A0YXXA(H)	1	PA66	UL94V-0

MM (INCH)	DFTO ExpeAny	DATE 03/09/06''	DEGSON® 宁波高正电子有限公司 DEGSON ELECTRONICS CO., LTD
TOLERANCES EXCEPT AS NOTED	CHKD	DATE	
MM .0 ± .00 ± .000 ±	MFO	DATE	NAME DG237-5.08-XXP-1Y-00A(H)
	APPVL	DATE	
ANGLES ± 1°	MATERIAL :		
	G.E :		DRAWING NO. DG237-5.08-E01 / PART NO. / SIZE A3 / REV T5 07/25/09"
THIRD ANGLE PROJECTION	FINISH :		
DIMENSIONED LISTS	SCALE : 1:1		DO NOT SCALE DRAWING / SHEET 1 OF 1

8 7 6 5 4 3 2 1