D1RFRD006

REVISION RECORD				
REV	ECO	DESCRIPTION	DRFT	DATE
1		修改刻字	Yej	05/11/07''
2	09-0115	增加CQC刻字	GHY	11/28/09''

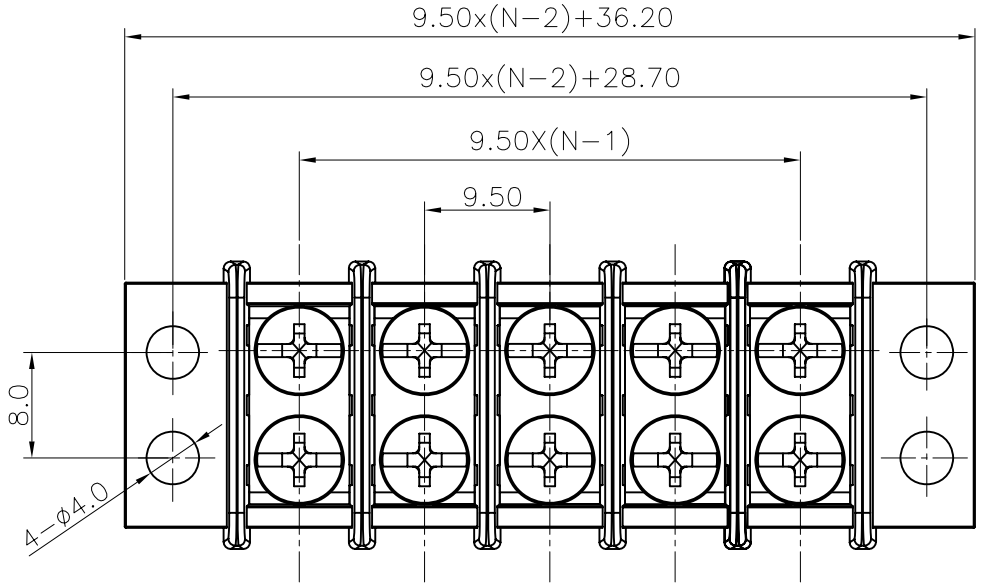

Notes:

1. Pitch:9.5mm ,Poles:2-24P
2. Rated voltage/current:UL 300V/20A
   IEC 250V/32A
3. Operation temperatures:-40℃～+80℃
4. Withstanding Voltage:AC2000V/1Min
5. Insulation Resistance:5000MΩ/DC500V
6. Wire Range:22～12AWG,4mm²
7. Max.Torque Value:M3.5,8.16kgf.cm
8. Undimensioned Tolerances:

Pitch range in mm			Naminal dimension range in mm					—
to 6	over 6 to 10	over 10 to 24	to 6	over 6 to 30	over 30 to 90	over 90 to 200	over 200 to 480	⌒ ▱
±0.10	±0.15	±0.25	±0.1	±0.2	±0.3	±0.5	±0.7	0.05/10

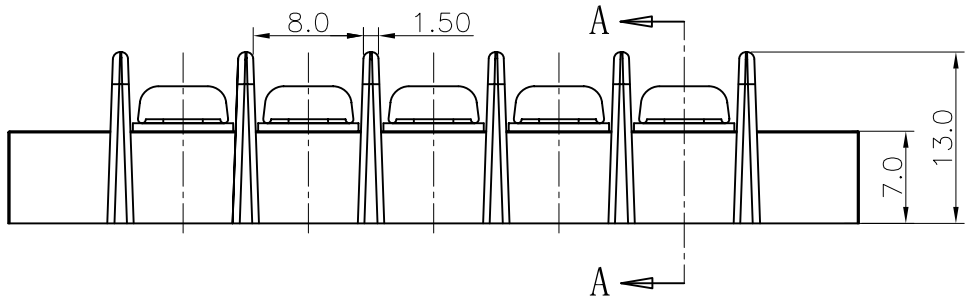

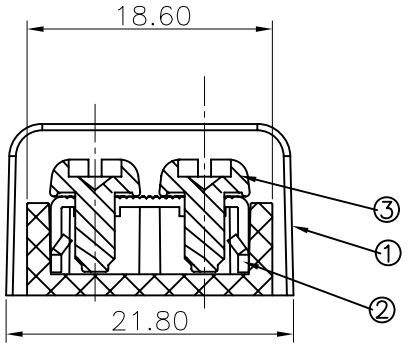

SECTION A-A

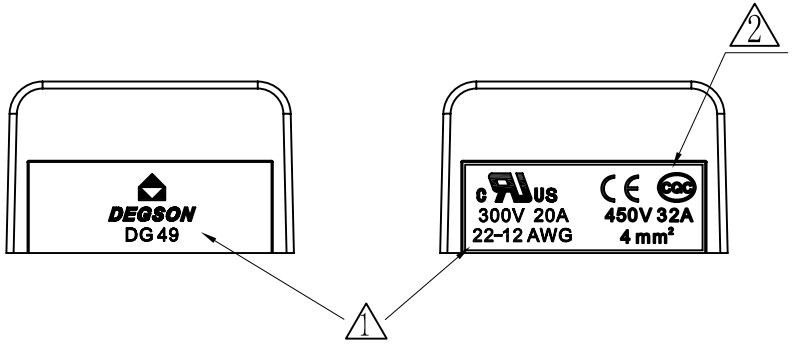

ITEM	NAME OF PART	NO. OF PART	Q"TY	MATERIAL	NOTES
1	DG49"+" Screw	S000000770(H)	2XX	Steel	Ni-Plated
2	DG49 Pin	5022B00040(H)	XX	Brass	Tin-Plated
3	DG49 Housing	5022M0YXXA(H)	1	PC	UL94V-2

DETACHED LISTS

MM (INCH)

TOLERANCES EXCEPT AS NOTED

MM	
.0 ±	±
.00 ±	±
.000 ±	±

ANGLES ± 1°

THIRD ANGLE PROJECTION

DFTO Home	DATE 04/01/06"	
CHKD	DATE	
MFO	DATE	
APPVL	DATE	
MATERIAL :		
G.E :		
FINISH :		
SCALE : 1:1		

DEGSON®

宁波高正电子有限公司
DEGSON ELECTRONICS CO., LTD

NAME DG49-A-XXP-1Y-00A(H)

DRAWING NO. DG49-E04
/PART NO.

SIZE A3 | REV T2 11/28/09"

DO NOT SCALE DRAWING

SHEET 1 OF 1